DO NOT SCALE , IF IN DOUBT – ASK

3rd ANGLE PROJECTION

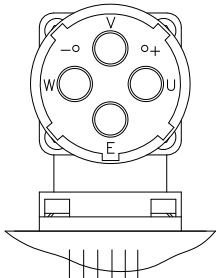

POWER CONNECTOR DETAILS

CONNECTION DIAGRAM

TERMINAL	FUNCTION	COLOUR
+	BRAKE (IF APPL'C)	BLACK
–	UNBRAKED (IF APPLIC')	BLACK
U	MOTOR PHASE	ORANGE
V	MOTOR PHASE	RED
W	MOTOR PHASE	YELLOW
E	EARTH	GREEN/YELLOW

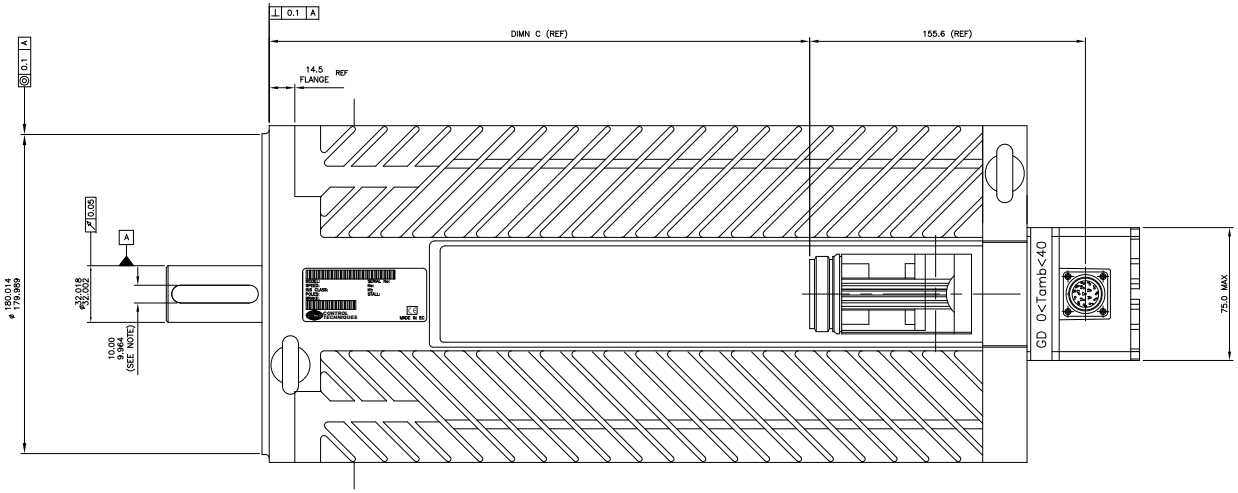

SIGNAL CONNECTOR ENCODERS (17 PIN) INTERCONNECTRON SIZE 1		UNDRIVE END D TYPE CONNECTOR (15 PIN)
FUNCTION	PIN	PIN
THERMISTOR,PTC	1	15
THERMISTOR,PTC RETURN	2	14
SCREEN	3	14
S1	4	7
S1 INVERSE	5	8
S2	6	9
S2 INVERSE	7	10
S3	8	11
S3 INVERSE	9	12
CH A	10	1
INDEX	11	5
INDEX INVERSE	12	6
CH A INVERSE	13	2
CH B	14	3
CH B INVERSE	15	4
+5V DC	16	13
0V	17	14

FRONT OF MOTOR

SIGNAL CONNECTOR ENCODER

VIEW ON ARROW 'B'

NOTE:
OUTPUT KEY DIMENSIONS APPLICABLE ONLY ON REQUIRED UNITS.

DRAWING No	UNIT No	DIMN A	DIMN B	DIMN C
IM/0626/GA/01	190 UM A	327.0	264.0	140.0
IM/0626/GA/02	190 UM B	381.0	318.0	194.0
IM/0626/GA/03	190 UM C	435.0	372.0	248.0
IM/0626/GA/04	190 UM D	489.0	426.0	302.0
	BRAKED			

DRAWING No	UNIT No	DIMN A	DIMN B	DIMN C
IM/0626/GA/05	190 UM A	273.0	210.0	86.0
IM/0626/GA/06	190 UM B	327.0	264.0	140.0
IM/0626/GA/07	190 UM C	381.0	318.0	194.0
IM/0626/GA/08	190 UM D	435.0	372.0	248.0
	UNBRAKED			

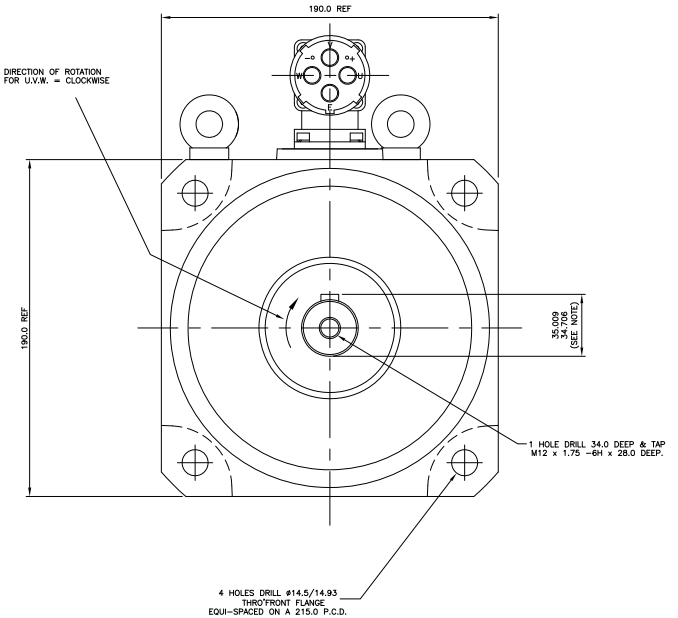

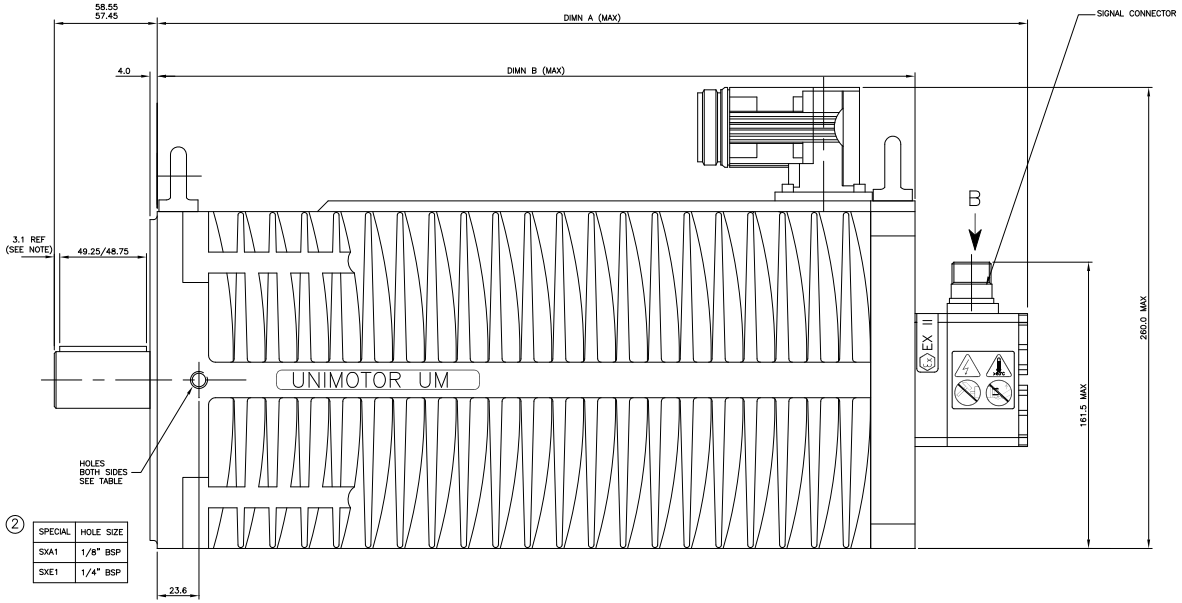

2

SPECIAL	HOLE SIZE
SXA1	1/8" BSP
SXE1	1/4" BSP

RIS	CR No.	BY	RIS	CR No.	BY	RIS	CR No.	BY	RIS	CR No.	BY	RIS	CR No.	BY	RIS	CR No.	BY	RIS	CR No.	BY	RIS	CR No.	BY	RIS	CR No.	BY	RIS	CR No.	BY	RIS	CR No.	BY	RIS	CR No.	BY	RIS	CR No.	BY
1	15846	AMW	2	16269	AB																																	

FIRST ISSUE (FROM IM/0318/GA/*)				TABLE ADDED, DIM 23.6 WAS 48.0																																		
DATE 08/12/05	APPR BY DB			DATE 31/10/06	APPR BY CA	DATE		APPR BY	DATE		APPR BY	DATE		APPR BY	DATE		APPR BY	DATE		APPR BY	DATE		APPR BY	DATE		APPR BY	DATE		APPR BY	DATE		APPR BY	DATE		APPR BY	DATE		APPR BY

DRAWN BY AMW | CHECKED DB | DRW DATE 08/12/05 | APPROVED AL | SCALE 1:1 | STATUS I

CONTROL TECHNIQUES
CONTROL TECHNIQUES DYNAMICS LTD.
WALWORTH, ANDOVER, HAMPSHIRE,
ENGLAND, SP10 5AB

THIS IS A C.A.D. PRODUCED DRAWING. SUBSEQUENTLY NO MANUAL MODIFICATIONS ALLOWED.

THIS DRAWING IS THE PROPERTY OF CONTROL TECHNIQUES DYNAMICS LTD AND MAY NOT BE USED OR REPRODUCED FOR ANY PURPOSE EXCEPT AS AUTHORISED BY CONTROL TECHNIQUES DYNAMICS LTD

LIMITS ON mm DIMENSIONS UNLESS OTHERWISE STATED
1 DECIMAL PLACE ± 0.4mm
2 DECIMAL PLACES ± 0.1mm
ANGULAR ± 30'

DIMENSIONS IN MILLIMETRES UNLESS OTHERWISE STATED

TITLE
OUTLINE DRAWING
190 UM SPECIAL

USED ON 190 UM SX*1

MATERIAL

SPECIFICATION IEC–72–1

FINISH

DRAWING NUMBER
PREFIX No. A0
IM/0626/GA/*
SUFFIX No.
SHT. 1 OF 1 ISSUE 1